Results in Engineering 26 (2025) 104690

Contents lists available at ScienceDirect

Results in Engineering

journal homepage: www.sciencedirect.com/journal/results-in-engineering

Research paper

Advanced machine learning for prediction of circumferential angle and lug spacing in hand tractor cage wheels using stacked ensemble machine learning

Irwin Syahri Cebro

Department of Mechanical Engineering, Lhokseumawe State Polytechnic, Lhokseumawe, Indonesia

ARTICLE INFO

Keywords:
Artificial intelligence
Circumferential angle
Hand tractors
Lug wheel
Terramechanics

ABSTRACT

Information on the performance of hand tractor cage wheels is crucial for implementing precision farming strategies in agricultural land tillage. Various approaches have been developed to predict cage wheel design, but previous efforts were limited to software, soil bins, and small scale testing. This study utilizes artificial intelligence with machine learning (ML) to optimize cage wheel design in hand tractors. We trained and evaluated multiple ML algorithms, including multiple linear regression, artificial neural network, k-nearest neighbor, adaptive boosting, extra trees regressor, and stacked ensemble machine learning (SEM), to predict circumferential angle and lug spacing. Models were assessed using the coefficient of determination (R^2), and root mean square error (RMSE) based on features such as pull forces, lift forces, side forces, power, traction efficiency, and slip. SEM achieved the highest performance, with a perfect R^2 and an RMSE for circumferential angle prediction. SEM also showed strong performance for lug spacing, achieving an R^2 of 0.99 and an RMSE of 0.47. This study confirms the effectiveness of SEM in optimizing hand tractor wheel designs, supporting efficient solutions for agricultural engineering across varying field conditions.

1. Introductions

The design and performance of hand tractor cage wheels have been extensively studied over the years due to their critical role in enhancing traction and operational efficiency in agricultural practices. Cage wheels are essential components that help tractors maintain stability and traction on wet and loose soil, especially in paddy fields and other soft ground environments [20]. Various approaches, including empirical and analytical models, have been developed to evaluate the performance of cage wheels, primarily focusing on parameters like traction force, slip, and efficiency [15]. However, previous studies largely focused on specific setups in controlled environments, such as soil bins, limiting their generalizability across diverse agricultural conditions [8,13,29]. Thus, a comprehensive understanding of the design and optimization of cage wheels remains critical for achieving efficient mechanized farming, as they affect the power, fuel consumption, and overall productivity of hand tractors.

Machine learning (ML) has emerged as a powerful tool in agricultural engineering, offering a data-driven approach for analyzing complex mechanical systems. By utilizing vast amounts of data, ML models can predict outcomes with high accuracy, identify patterns that may not be apparent in traditional analyses, and offer robust solutions for design optimization [27]. Techniques such as artificial neural networks (ANNs), k-nearest neighbors (kNN), and multiple linear regression (MLR) have been employed to predict outcomes in various mechanical and agricultural applications [4,25,33]. For instance, ANNs have been effectively used to optimize agricultural machinery settings, enhancing performance and reducing operational costs [2]. Despite these advances, the application of ML specifically for cage wheel design in hand tractors remains limited, and there is a need to evaluate various algorithms to determine the most suitable approach for accurate and reliable predictions in this context.

The circumferential angle and lug spacing of cage wheels are two critical design parameters that significantly influence the performance of hand tractors in field operations. The circumferential angle, which describes the angle between the lug and the wheel axis, impacts the thrust force and penetration into the soil [34]. Likewise, lug spacing affects the distribution of traction forces across the wheel circumference, influencing slip and traction efficiency. Research has shown that optimizing these parameters can enhance the tractor's pulling capacity and reduce slippage, leading to increased productivity and reduced soil compaction [36]. However, manually adjusting and testing these

E-mail address: owencebro@pnl.ac.id.

https://doi.org/10.1016/j.rineng.2025.104690
Received 11 February 2025; Received in revised form 14 March 2025; Accepted 20 March 2025
Available online 20 March 2025
2590-1230/© 2025 The Author. Published by Elsevier B.V. This is an open access article under the CC BY-NC license (http://creativecommons.org/licenses/by-nc/4.0/).

parameters in the field is time-consuming and resource-intensive. As such, leveraging ML to model and predict these parameters can accelerate the optimization process, making it more feasible to test various configurations efficiently.

There is a notable research gap in applying ML to optimize cage wheel design for hand tractors, specifically focusing on the prediction of circumferential angle and lug spacing. While some studies have explored ML applications in other aspects of agricultural machinery, such as plow design and seeding equipment [27], limited attention has been given to the nuanced design parameters of cage wheels. Additionally, existing studies tend to focus on individual ML models rather than exploring ensemble methods, which have shown potential in improving prediction accuracy by combining multiple algorithms [12,38]. Therefore, the primary objective of this study is to train and test machine learning algorithms, including multiple linear regression (MLR), artificial neural network (ANN), k-nearest neighbor (kNN), Ada-boost (ABS), extra trees regressor (ETR) and stacked ensemble machine learning (SEM) to predict circumferential angle and lug spacing of cage wheel in hand tractor.

2. Datasets and methods

2.1. Dataset collection

The dataset was collected from the research results of Watyotha and Salokhe [35] and Watyotha et al. [34], which directly measured the circumferential angle and lug spacing in the soil bin. The circumferential angle is the angle made by the lug with the wheel axis (Fig. 1). Lug spacing is defined as the angle formed between two radial lines connecting adjacent lugs along the circumference (Fig. 1). As the circumferential angle increased at the same width of the tire, the length of the lug increased, and also the wheel soil thrust increased. The increase in circumferential angle up to 25° improved the performance [36]. From the combination of the two studies, the independent variables as predictors (X) were collected, including pull forces (N), lift forces (N), side forces (N), power (watt), traction efficiency (%), and slip (%). The reference as the independent variable (Y) is the lug spacing and circumferential angle. The total number of samples by experiment was 36 times. To handle the minimum sample experiment dealing with machine learning (ML), this study modifies the method proposed by Devianti et al. [11] and ensemble learning from Devianti et al. [10].

2.2. Machine learning and model overview

Estimation models for circumferential angle and lug spacing were developed using multiple linear regression (MLR), artificial neural network (ANN), k-nearest neighbor (kNN), adaptive boosting (ABS), extra trees regressor (ETR), and stacked ensemble machine learning (SEM). This algorithm was chosen to represent the computational characteristics starting from the simplest ML algorithms (MLR), more complex (ANN, kNN), and more complex (ABS, ETR), and combining them in a stacked ensemble machine learning (SEM). An overview of the procedure flow diagram of the proposed in this study can be seen in Fig. 2. The flow diagram then depicts the model training and optimization stages, where hyperparameters for each algorithm were fine-tuned using grid search and cross-validation to improve prediction accuracy. The Fig. 2 also includes the integration of base learners within the stacked ensemble model (SEM), highlighting the process of combining intermediate predictions from individual models, which are input into a meta-learner for the final prediction. This approach allows SEM to leverage the strengths of each base algorithm, thus enhancing predictive performance for estimating both circumferential angle and lug spacing in cage wheel design.

The predefined parameter for searching for the optimum hyperparameter is shown in Table 1. The selection of the hyperparameter range of each ML algorithm in this study is based on at least a combination of the computational needs factor itself, the author's experience, and references from several previous studies. Computational needs include the number of n-estimators in the ABS and ETR algorithm, which require a maximum number of independent variables minus one (n-1). In addition, based on the author's experience, the number of n-neighbors can be used as many as the number of existing samples to provide flexibility for the algorithm to determine the number of closest samples. Hidden layer sizes for the ANN algorithm are based on references [32] that offer recommendations for searching the number of nodes starting

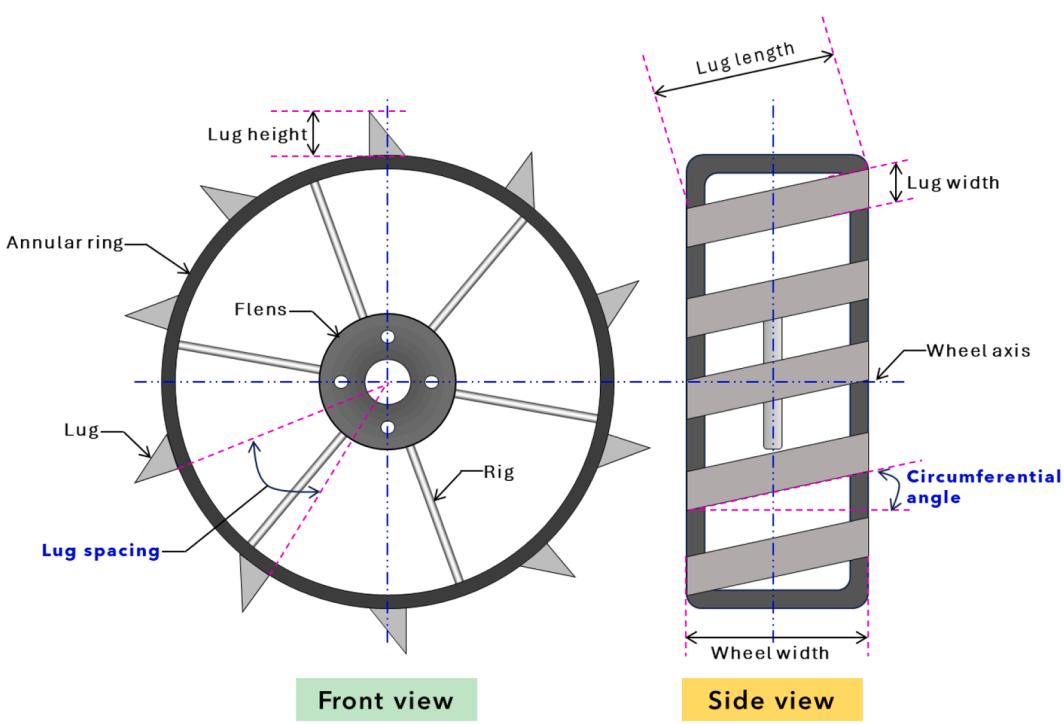

Fig. 1. Graphical outline of cage wheel parameters (a) side view and (b) front view [34,35].

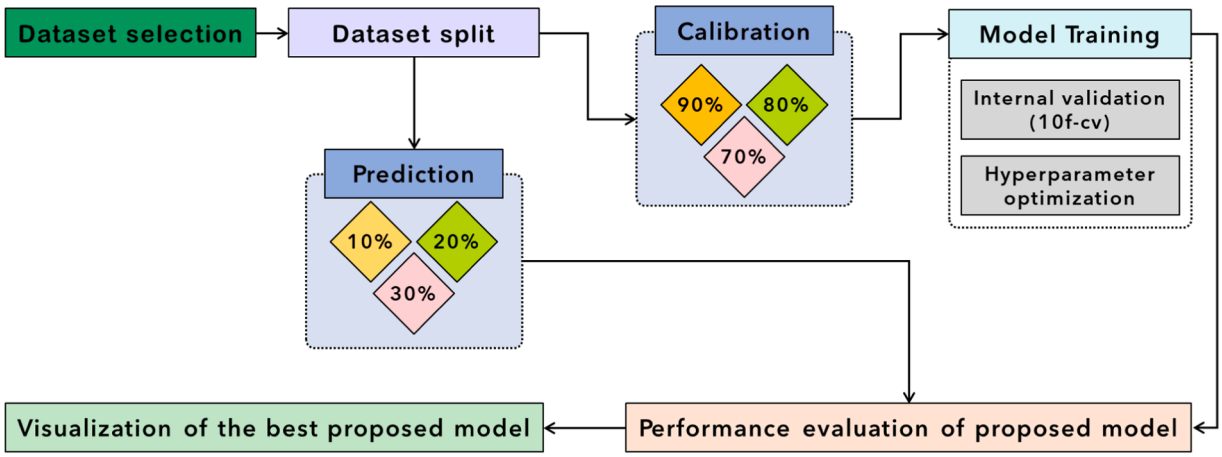

Fig. 2. The procedural flow diagram of the proposed study.

Table 1
Hyperparameters setting for performing the GridSearchCV prompt with 10f-CV.

Algorithm	Hyperparameter	Turning Range
ANN	Hidden layer sizes	(4), (4, 4), (4, 4, 4), (8), (8, 8), (8, 8, 8), (16), (16, 16), (16, 16, 16), (32), (32, 32), (32, 32, 32), (64), (64, 64), (64, 64, 64), (128), (128, 128), (128, 128, 128), (256), (256, 256), (256, 256, 256)
	Activation function	identity, logistic, tanh, relu
kNN	*n*-neighbors	1 – 36
	Algorithm	auto, ball tree, kd tree, brute
	Leaf size	1 – 36
	Power parameter	1, 2
ABS	Learning_rate	0.1, 0.01
	n-estimators	1 – 5
ETR	*n*-estimators	1 – 5
	Min samples leaf	1 – 10
	Min samples split	1 – 10

from 4, 8, 16, 32, 64, 128, and 256 with one to three hidden layer sizes.

According to the lowest root mean square error of cross-validation ($RMSE_{CV}$), the best hyperparameter was revealed by performing 10-fold cross-validation (10f-CV), where each model was iteratively trained on nine subsets of the data and validated on the tenth subset. By evaluating the root mean square error of cross-validation ($RMSE_{CV}$) for each configuration, the process ensured that the selected hyperparameters minimized prediction error consistently across data splits. This approach allowed for a rigorous assessment of each model's ability to generalize well, balancing accuracy with computational efficiency. The final hyperparameters selected were those that yielded the lowest $RMSE_{CV}$, providing the most reliable configurations for accurately predicting the circumferential angle and lug spacing in the ensemble and individual models. This systematic tuning enhances model robustness and performance and avoids overfitting, especially when predicting complex patterns in agricultural datasets.

2.2.1. Multiple linear regression (MLR)

Multiple Linear Regression (MLR) is a statistical method used to model the relationship between a dependent variable and multiple independent variables by fitting a linear equation to observed data. In MLR, the goal is to find the best-fit line that minimizes the difference between observed values and the values predicted by the model [31]. The general equation for MLR is expressed as in Eq. (1).

$$Y = \beta_0 + \beta_1 X_1 + \beta_2 X_2 + \ldots + \beta_n X_n + \varepsilon \tag{1}$$

Where, Y represents the dependent variable, β_0 is the intercept, β_1, β_2, …, β_n are the coefficients of the independent variables, X_1, X_2, … X_n and ε is the error term. MLR assumes a linear relationship between predictors and the outcome, and it is widely used due to its simplicity and interpretability. In this study, MLR serves as a baseline model to predict the circumferential angle and lug spacing of cage wheels based on various agricultural parameters.

2.2.2. Artificial neural network (ANN)

Artificial Neural Networks (ANNs) are computational models inspired by the human brain's structure and function, designed to recognize patterns and model complex relationships within data. An ANN consists of layers of interconnected nodes or "neurons," where each connection carries a weight that adjusts during training to minimize prediction errors. The architecture typically includes an input layer, one or more hidden layers, and an output layer [5]. Each neuron applies an activation function, such as the sigmoid or ReLU function, to introduce non-linearity using Eq. (2).

$$f(x) = \sigma\left(\sum_{i=1}^{n} w_i x_i + b\right) \tag{2}$$

Where, x_i are inputs, w_i are weights, b is the bias, and is σ the activation function. During training, ANNs learn to adjust weights using backpropagation to minimize the error between predicted and actual values. In this study, ANNs are used to predict the circumferential angle and lug spacing, providing flexibility in capturing non-linear relationships among variables.

2.2.3. k-nearest neighbor (kNN)

The k-nearest Neighbor (kNN) algorithm is a simple, non-parametric method for classification and regression tasks. In kNN, predictions for a new data point are based on the k closest training examples in the feature space [21]. The algorithm calculates the distance between the latest data point and all other points in the dataset, typically using Euclidean distance, as shown in Eq. (3).

$$d(x, x') = \sqrt{\sum_{i=1}^{n} \left(x_i - x_i'\right)^2} \tag{3}$$

Where, x and x' represent two points, x_i and x_i' are their respective feature values. For regression tasks, kNN takes the average of the values of the k nearest neighbors to predict the target value. This study uses kNN to predict circumferential angle and lug spacing, as the algorithm can capture local patterns in the data without assuming a specific functional form, making it effective for complex, non-linear relationships.

2.2.4. Adaptive boosting (ABS)

Adaptive boosting (ABS) is an ensemble learning algorithm that combines multiple weak learners to create a strong predictive model. ABS sequentially trains weak learners, typically decision stumps (single-split decision trees), by adjusting the weights of misclassified samples, thereby focusing on difficult cases [6]. The algorithm updates the weights in each iteration based on the error of each learner, calculated as Eq. (4).

$$\alpha_t = \frac{1}{2}\ln\left(\frac{1-e_t}{e_t}\right) \tag{4}$$

where α_t is the weight assigned to each learner, e_t and is the error rate. Subsequent learners are then trained with a focus on samples with higher weights. In the end, ABS aggregates the outputs of all learners by weighted majority voting for classification or weighted average for regression. In this study, ABS is applied to predict circumferential angle and lug spacing, enhancing prediction accuracy by combining multiple models for more robust performance.

2.2.5. Extra trees regressor (ETR)

Extra Trees Regressor (ETR) is an ensemble learning method based on decision trees designed to improve prediction accuracy and reduce overfitting. Unlike traditional decision trees that select optimal split points, ETR randomly selects split points, adding greater diversity among trees in the ensemble. Each tree in ETR is trained on a random subset of features, and predictions are made by averaging the outputs of all trees in the ensemble [28]. The general prediction formula for ETR is shown in Eq. (5).

$$\hat{y} = \frac{1}{T}\sum_{t=1}^{T} h_t(x) \tag{5}$$

Where, $\hat{y}$ is the predicted output, T is the number of trees, and $h_t(x)$ represents the prediction from each individual tree. By injecting randomness, ETR reduces variance and is less prone to overfitting than standard decision trees. In this study, ETR is used to predict the circumferential angle and lug spacing, offering robust performance across different data distributions.

2.2.6. Stacked ensemble machine learning (SEM)

Stacked Ensemble Machine Learning (SEM) is an advanced ensemble technique that combines the predictions of multiple base models to improve overall accuracy and robustness. In SEM, multiple algorithms (base learners) are trained on the dataset, and their predictions serve as input for a final model, known as the meta-learner, which generates the final prediction [1,17,37]. In this study, the base learners include 11 algorithms: artificial neural network (ANN), k-nearest neighbor (kNN), adaptive boosting (ABS), extra trees regressor (ETR), random forest (RF), gaussian process regressor (GPR), gradient boosting regressor (GB), support vector machine (SVM), bayesian ridge (BYR), bagging regressor (BGR), and partial least squares regression (PLSR). Each base model generates an intermediate prediction as in Eq. (6). These predictions are then fed into kNN, the chosen meta-learner, which learns to combine them effectively for the final output. This stacked approach leverages the strengths of each model to produce more accurate predictions for circumferential angle and lug spacing in the cage wheel design.

$$Y_{final} = M_{meta}(Y_{ANN} + Y_{kNN} + \ldots + Y_{PLSR}) \tag{6}$$

2.3. Evaluation metrics

The coefficient of determination of the calibration (R_c^2), cross-validation (R_{cv}^2) and prediction (R_p^2) sets, the root mean square error of the calibration ($RMSE_c$), cross-validation ($RMSE_{cv}$) and prediction ($RMSE_p$) sets were used to assess model performance. By evaluating R^2 and RMSE at each stage, we obtain a balanced view of the model's capacity to utilize beyond the training data while verifying its consistency and reliability under varying conditions. This dual-evaluation approach ensures that the selected model is both interpretable and robust, making it suitable for optimizing cage wheel design in practical applications.

The R^2 metric measures the proportion of variance explained by the model, offering insight into how well the predictive variables collectively account for changes in circumferential angle and lug spacing. High R^2 values across calibration, cross-validation, and testing indicate that the model generalizes well and can accurately capture underlying patterns.

On the other hand, RMSE quantifies the average prediction error, providing a direct measure of the model's precision by indicating how close predicted values are to actual values in each stage. RMSE is particularly important in assessing the model's practical accuracy, as lower RMSE values correspond to smaller discrepancies in prediction. Using both metrics across calibration, cross-validation, and prediction stages ensures that the model is accurate and resilient to overfitting.

3. Result and discussions

3.1. Descriptive statistic of dataset

The dataset's descriptive statistics, as depicted in Fig. 3, highlight the distribution of key features for predicting lug spacing and circumferential angle across three test sizes: 90/10, 80/20, and 70/30. Observations across these test splits indicate a consistent range and distribution for predictors such as pull force, lift force, and traction efficiency, suggesting robust data characteristics despite a limited sample size. The even distribution across test sizes minimizes bias, which is critical in machine learning (ML) applications for precision agriculture. Pereira et al. [23] noted that balanced datasets are essential for enhancing model performance and reliability in predicting soil and crop parameters. For example, the dataset's traction efficiency and slip variables demonstrate low skewness, which aligns with findings by [35], who reported that well-distributed data on tractor parameters yield better predictive outcomes. This dataset's balanced range across all variables is crucial to the model's ability to generalize, particularly for ensemble models that combine multiple base predictions.

Comparing this study's data distribution with prior agricultural machine-learning applications further reveals the significance of descriptive statistics in model reliability. For instance, Khaledian and Miller [16] examined predictive models for soil quality using datasets with high variance in feature distributions, which often led to overfitting in models such as kNN and ANN. In contrast, Fig. 3 shows a more controlled data spread for circumferential angle and lug spacing, potentially reducing overfitting risks in the applied models. Additionally, this study's application of three distinct test sizes (90/10, 80/20, 70/30) for cross-validation is similar to the approach used by Brereton [7], who demonstrated that multiple test splits improve model robustness by simulating various real-world data distributions. The consistency of results across test splits in this study supports the reliability of the dataset and aligns with best practices in agricultural ML studies, further validating the dataset's appropriateness for developing predictive models for tractor component design.

3.2. Correlation among variables predictors

The correlation matrix in Fig. 4 highlights relationships between critical predictive features, including pull force, lift force, side force, power (P), traction efficiency, and slip, which are integral to modeling circumferential angle and lug spacing. A strong positive correlation ($r = 0.91$) is observed between pull forces and lift forces, suggesting that these two variables collectively impact tractor-wheel performance, as higher pull forces generally correspond to increased lift forces in field conditions. This finding is consistent with the work of Watyotha and

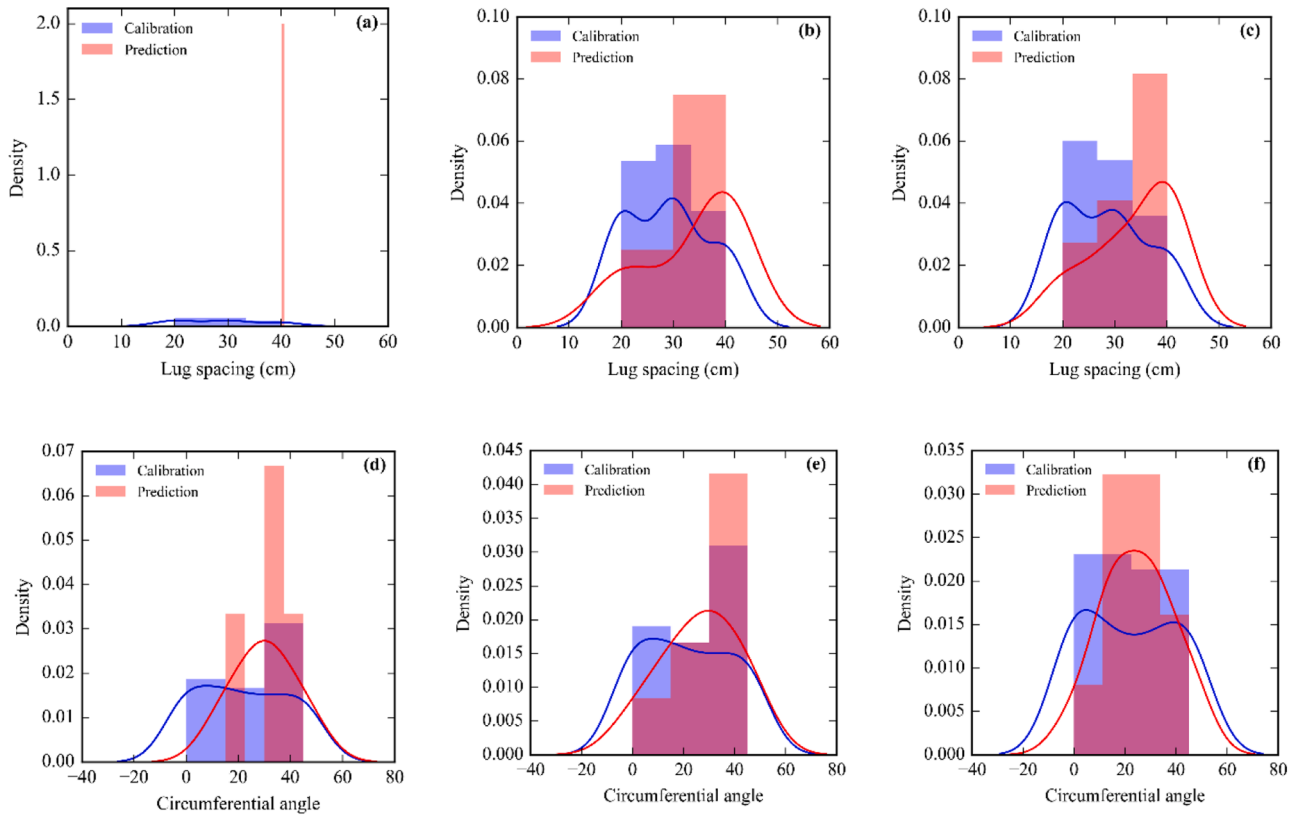

Fig. 3. Distributions data collection for predictive lug spacing (a–c) and circumferential angle (d–f) with test sizes: 90/10 in (a, d), 80/20 in (b, e), and 70/30 in (c, f).

Salokhe [36], who noted that a combination of these forces plays a crucial role in maintaining traction effectiveness and balancing energy consumption. Similarly, a moderate positive correlation exists between pull forces and power ($r = 0.35$), indicating that increased pull requirements can influence power needs. Although weaker, this correlation aligns with field observations that higher pulling demands increase fuel consumption and power output, underscoring the importance of optimizing these factors for efficient tractor operation.

The correlation between traction efficiency and slip is significantly negative (r=−0.91), suggesting that higher traction efficiency is strongly associated with reduced slippage, which is advantageous in minimizing soil disruption during tractor operations. Liu et al. [19] similarly found that optimizing traction efficiency improves stability and operational efficiency, especially in challenging soil conditions. Notably, power also has a moderate negative correlation with slip (r=−0.44), indicating that as power increases, slip tends to decrease. This relationship can be advantageous in specific field conditions where increased power can maintain stable traction with less slippage, resulting in smoother field operations. These findings validate the interconnected nature of traction-related variables in tractor performance and highlight the importance of a balanced design that minimizes slip for improved tractor efficiency.

Side forces exhibit a low correlation with other variables, showing negligible relationships with pull forces ($r = 0.08$), lift forces ($r = 0.04$), and power (r=−0.25). This indicates that side forces operate relatively independently from other forces in this context, which could be due to the directional nature of side forces that does not directly influence pull or lift. However, side forces maintain a mild negative correlation with both traction efficiency (r=−0.26) and slip (r=−0.05), suggesting that side forces could have a subtle impact on wheel stability. These findings collectively underscore the importance of pull and lift forces as primary drivers in tractor-wheel performance, while traction efficiency and slip demonstrate a highly interdependent relationship essential for optimizing wheel design in agricultural tractors.

Compared with studies on agricultural machinery optimization, this correlation structure highlights the significance of including multi-factor predictors in ML models. For instance, Dahia and Szabo [9] noted that single-variable models often struggle with overfitting when applied to complex systems, such as soil-tractor interactions, due to an inability to capture interdependencies among predictors. Using multiple predictors with inter-variable solid relationships, as seen in Fig. 4, this study's dataset aligns with best practices in agricultural ML applications, where robust models benefit from interrelated feature sets. The moderate to strong correlations observed in this dataset also align with findings by Hermawan et al. [14], who reported that interactions among forces like pull and side force directly impact load distribution and lug performance. Thus, this correlation analysis validates the dataset's selection of predictors and provides a strong foundation for ML models to predict circumferential angle and lug spacing accurately.

3.3. Performance of machine learning models

3.3.1. Prediction of circumferential angle

The R^2 values presented in Fig. 5 for circumferential angle predictions reveal the effectiveness of the ML models in capturing variance across different test sizes: 90/10, 80/20, and 70/30. The stacked ensemble machine learning (SEM) model achieved the highest R^2 values across all test splits, with perfect scores of 1.00 in calibration, cross-validation, and prediction for all test ratios (90/10, 80/20, and 70/30). This result demonstrates SEM's strength in utilizing multiple predictors to account for variance in circumferential angle accurately, supporting findings by Ganaie et al. [12], who noted that ensemble methods often outperform individual models by capturing complex relationships through combined predictions. In comparison, models like MLR and kNN yielded lower R^2 scores, especially under cross-validation and prediction. For instance, MLR consistently scored 0.99 in calibration

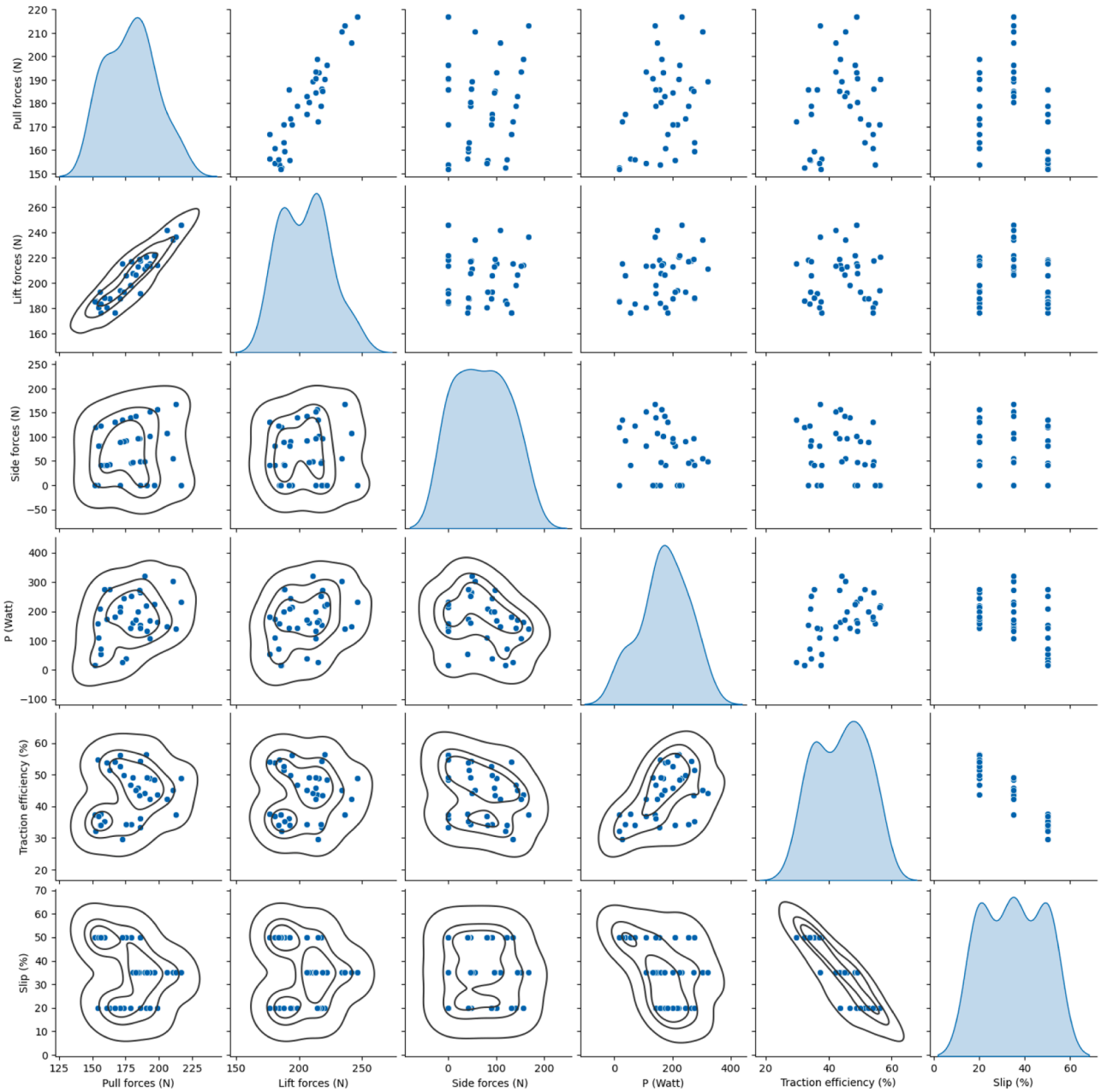

Fig. 4. Dispersion of the dataset and correlation matrix of the features among variables predictors.

but fell to 0.00 in cross-validation across all test ratios, indicating limited generalization capability. Similarly, kNN showed fluctuating R^2 values in prediction, reaching 1.00 at 90/10 but dropping to 0.86 and 0.84 at 80/20 and 70/30, respectively. These results highlight SEM's superior performance in accurately predicting circumferential angle, reinforcing the need for models capable of handling complex tractor-soil interactions for reliable agricultural applications.

Regarding root mean square error (RMSE), Fig. 5 indicates that the SEM model consistently produced the lowest RMSE values across all test splits, outperforming other algorithms, especially with the 90/10 and 80/20 test sizes. For each test ratio (90/10, 80/20, and 70/30), SEM achieved an RMSE of 0.00 in calibration, cross-validation, and prediction, underscoring its high accuracy in minimizing prediction errors. This result is consistent with findings by Peppes et al. [22], who noted that ensemble methods, by combining multiple algorithms, generally achieve lower error rates in agricultural machine-learning models. In contrast, simpler models like MLR and ANN displayed higher RMSE values, particularly as the test split increased. For instance, MLR had RMSE values in prediction of 1.64, 1.67, and 1.41 for 90/10, 80/20, and 70/30, respectively, while ANN's RMSE in prediction increased from 1.82 at 90/10 to 2.75 at 70/30, indicating challenges in generalizing across varied data subsets. Rashid et al. [24] observed similar trends, where simpler models had higher errors in field condition predictions due to limitations in handling diverse input variables. Thus, the low RMSE values achieved by SEM highlight its reliability and robustness, making it highly suitable for applications that require precise circumferential angle predictions.

When considering both R^2 and RMSE values together, SEM demonstrates clear superiority in predicting circumferential angle, as evidenced by its high R^2 and low RMSE across all test sizes. These combined metrics underscore the model's ability to capture a substantial amount of variance and minimize errors, resulting in predictions that are both accurate and consistent. In contrast, the kNN and ABS models, while showing moderate R^2 scores, produced higher RMSE values, indicating

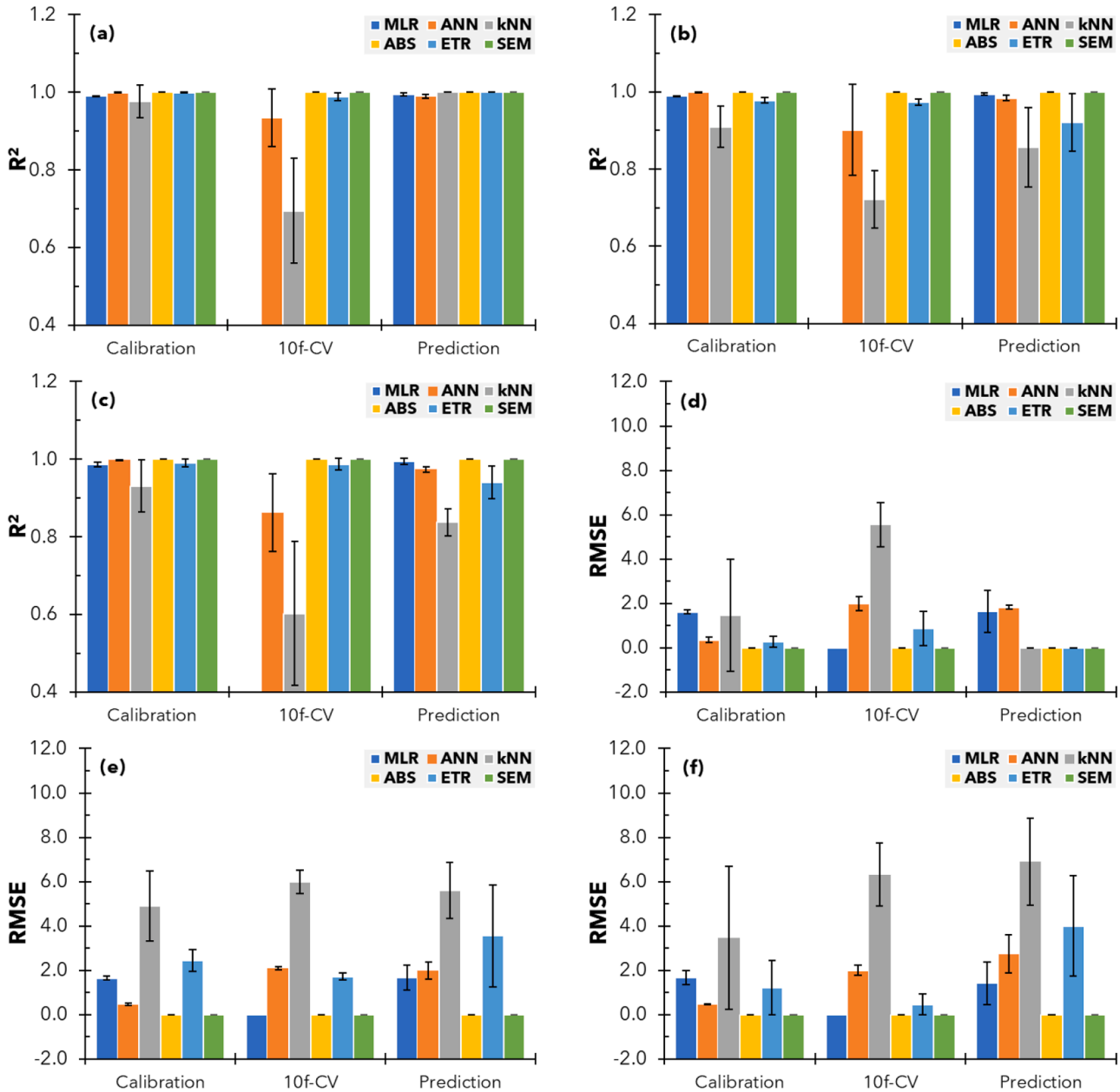

Fig. 5. Circumferential angle prediction performance using R^2 and RMSE across test ratios of 90/10 (a, d), 80/20 (b, e), and 70/30 (c, f); with (a–c) for R^2 and (d–f) for RMSE.

less reliable predictions with more significant variability. This observation aligns with Sharma et al. [27], who noted that models with low RMSE and high R^2 offer optimal performance in agricultural applications, ensuring both precision and robustness. The balance of high R^2 and low RMSE achieved by SEM indicates its suitability for predicting complex parameters like circumferential angle, where accuracy is critical for design optimization. Consequently, this study supports previous findings that ensemble learning, specifically SEM, enhances predictive performance by effectively balancing error minimization and variance explanation, making it a valuable tool in agricultural engineering applications.

3.3.2. *Prediction of lug spacing*

The R^2 values in Fig. 6 show the effectiveness of the ML models in predicting lug spacing, with notable differences across various test sizes (90/10, 80/20, and 70/30). The SEM model again demonstrated the highest R^2 scores across all test splits, indicating its strong ability to accurately explain the variance in lug spacing. High R^2 values reflect that SEM can effectively capture complex relationships among predictor variables, which aligns with findings by Shahhosseini et al. [26], who observed that ensemble methods are more effective than individual models in accounting for complex variability in agricultural datasets. Meanwhile, models like MLR and ANN exhibited lower R^2 values, particularly with the 70/30 test size, highlighting their limitations in capturing the multi-dimensional patterns essential for lug spacing prediction. These findings repeat those of Li et al. [18], who found that simpler algorithms struggle with prediction accuracy in developing pedo transfer functions to predict soil hydraulic properties tasks, reinforcing the advantage of SEM in lug spacing applications.

Analyzing RMSE in Fig. 6, the SEM model consistently achieved the lowest RMSE values, indicating its accuracy in lug spacing prediction by minimizing the differences between predicted and actual values. The lower RMSE values observed with SEM, especially with the 90/10 and 80/20 test splits, signify that this model produces reliable and precise

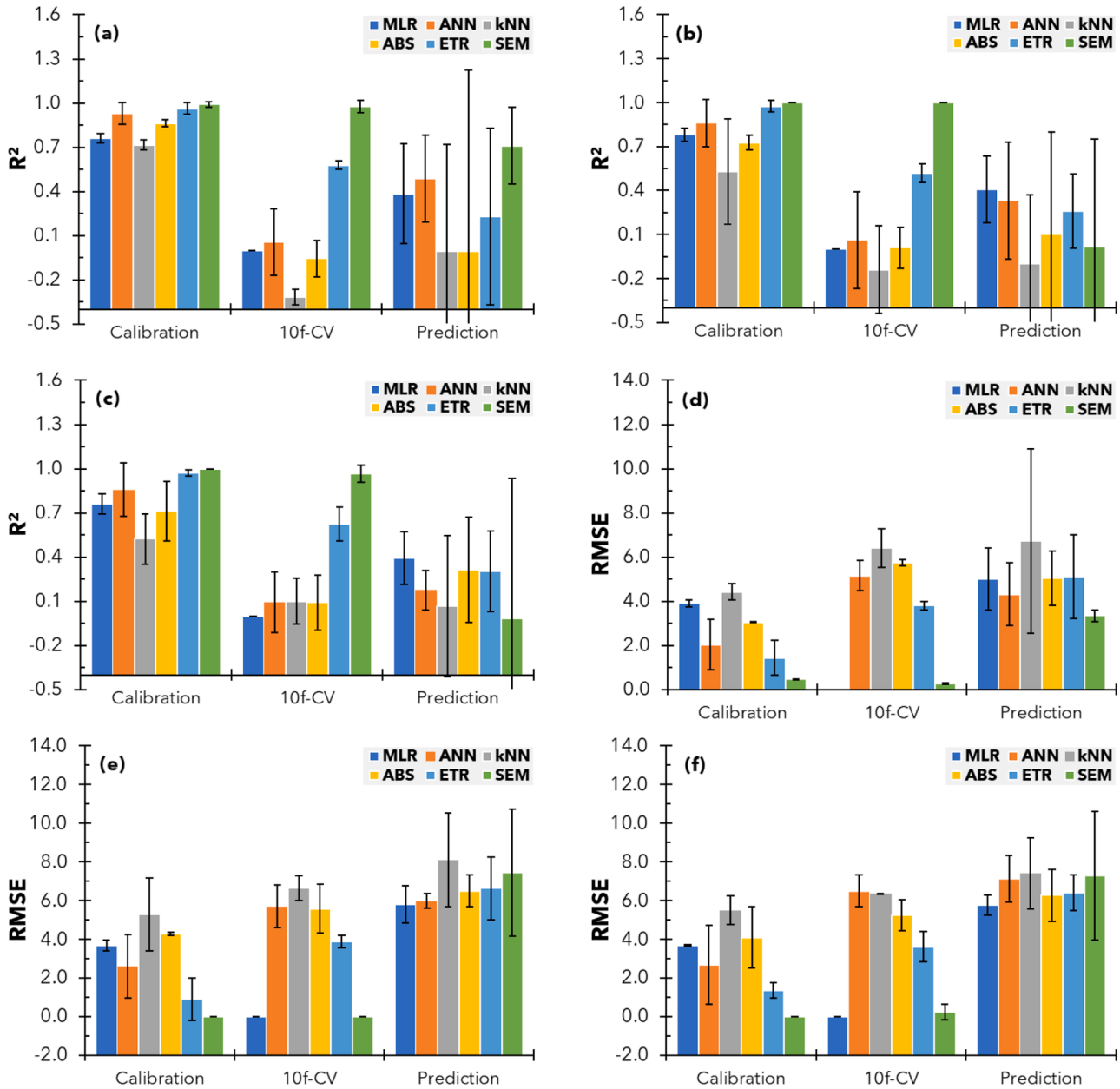

Fig. 6. Performance of lug spacing predictions using R^2 (a–c) and RMSE (d–f) across test sizes: (a, d) 90/10; (b, e) 80/20; (c, f) 70/30.

predictions with minimal error. Lower RMSE is essential in agricultural applications, as seen in the study by Askari et al. [3], where reducing prediction error in tractor component design improved operational efficiency. In contrast, kNN and ABS models yielded higher RMSE values, particularly with the more significant test split (70/30), suggesting these models may not generalize as effectively across different subsets. This observation aligns with findings by Trentin et al. [30], who noted that models with high RMSE tend to struggle with accurate prediction in complex datasets. Therefore, the SEM's lower RMSE reinforces its suitability for precise lug spacing prediction, which is essential for optimized wheel design.

Combining R^2 and RMSE analyses, SEM is confirmed as the most robust model for predicting lug spacing, with high R^2 and low RMSE across all test sizes. For the 90/10 test ratio, SEM achieved an R^2 of 0.99 in calibration, 0.98 in cross-validation, and 0.71 in prediction, with corresponding RMSE values of 0.47, 0.26, and 3.35, respectively. At the 80/20 ratio, SEM maintained perfect R^2 values of 1.00 in both calibration and cross-validation, though the prediction R^2 slightly decreased to 0.02, while RMSE values were 0.00 in calibration and cross-validation but rose to 7.43 in prediction. The 70/30 ratio showed a similar pattern, with R^2 values of 1.00 in calibration, 0.97 in cross-validation, and −0.02 in prediction, and RMSE values of 0.00 in calibration, 0.24 in cross-validation, and 7.29 in prediction. In contrast, models like MLR and ANN had moderate R^2 and higher RMSE values, such as MLR's prediction R^2 of 0.38 to 0.41 and RMSE of 5.01 to 5.81, and ANN's prediction R^2 ranging from 0.17 to 0.49 with RMSE increasing from 4.31 to 7.13. These results highlight SEM's strength in maintaining a balance of high accuracy and low error, validating its effectiveness for lug spacing prediction in agricultural machinery design.

4. Conclusions

This study demonstrated the effectiveness of stacked ensemble machine learning (SEM) in accurately predicting the circumferential angle and lug spacing for cage wheels in hand tractors. Compared to individual models such as multiple linear regression (MLR), artificial neural

network (ANN), and k-nearest neighbor (kNN), the SEM model achieved superior performance, evidenced by perfect R^2 values of 1.00 across all test splits for circumferential angle and high R^2 values up to 0.99 in calibration for lug spacing. SEM also consistently produced lower RMSE values. This confirms SEM's ability to capture complex interactions among predictive variables, offering robust, reliable predictions that can significantly enhance cage wheel design optimization.

The SEM model developed in this study offers notable advantages, enhancing prediction accuracy and robustness for estimating circumferential angle and lug spacing in cage wheels. By integrating multiple base learners, SEM captures complex variable interactions, yielding more precise and reliable predictions than individual models. This adaptability across different test splits makes SEM a valuable tool for optimizing agricultural machinery under varying soil and operational conditions. While this study successfully demonstrates the potential of stacked ensemble machine learning models in predicting circumferential angle and lug spacing for hand tractor cage wheels, several limitations must be acknowledged. The dataset utilized was limited in size and diversity, potentially affecting the generalizability of the findings. Additionally, the models were trained under specific environmental conditions, which may not fully represent all agricultural settings.

For future work, further research could expand SEM's applicability by testing it across a broader range of soil types and tractor specifications, improving its utility in diverse agricultural settings. Integrating real-time sensor data as dynamic inputs may also enhance prediction accuracy by reflecting actual field conditions. Additionally, expanding the dataset and exploring advanced ensemble techniques, such as deep learning-based approaches, could further strengthen model robustness and versatility, supporting the development of efficient and adaptable solutions in agricultural engineering.

CRediT authorship contribution statement

Irwin Syahri Cebro: Writing – review & editing, Writing – original draft, Visualization, Validation, Supervision, Software, Resources, Project administration, Methodology, Investigation, Funding acquisition, Formal analysis, Data curation, Conceptualization.

Declaration of competing interest

The authors declare that they have no known competing financial interests or personal relationships that could have appeared to influence the work reported in this paper.

Data availability

Data will be made available on request.

References

[1] J.O. Afape, A.A. Willoughby, M.E. Sanyaolu, O.O. Obiyemi, K. Moloi, J.O. Jooda, O.F. Dairo, Improving millimetre-wave path loss estimation using automated hyperparameter-tuned stacking ensemble regression machine learning, Results. Eng. 22 (2024) 102289, https://doi.org/10.1016/j.rineng.2024.102289.

[2] M. Aghbashlo, S. Hosseinpour, A.S. Mujumdar, Application of artificial neural networks (ANNs) in drying technology: a comprehensive review, Dry. Technol. 33 (12) (2015) 1397–1462, https://doi.org/10.1080/07373937.2015.1036288.

[3] M. Askari, Y. Abbaspour-Gilandeh, E. Taghinezhad, R. Hegazy, M. Okasha, Prediction and optimizing the multiple responses of the overall energy efficiency (OEE) of a tractor-implement system using response surface methodology, J. Terramech. 103 (2022) 11–17, https://doi.org/10.1016/j.jterra.2022.06.003.

[4] L. Benos, A.C. Tagarakis, G. Dolias, R. Berruto, D. Kateris, D. Bochtis, Machine learning in agriculture: a comprehensive updated review, Sensors 21 (11) (2021) 3758, https://doi.org/10.3390/s21113758.

[5] M. Bietresato, A. Calcante, F. Mazzetto, A neural network approach for indirectly estimating farm tractors engine performances, Fuel 143 (2015) 144–154, https://doi.org/10.1016/j.fuel.2014.11.019.

[6] E.C. Blessie, S. Balasubaramanian, V. Kumutha, Empirical analysis of crop yield prediction using hybrid model. Intelligent Robots and Drones for Precision Agriculture, Springer, 2024, pp. 63–85, https://doi.org/10.1007/978-3-031-51195-0_4.

[7] R.G. Brereton, Consequences of sample size, variable selection, and model validation and optimisation, for predicting classification ability from analytical data, TrAC Trends Analytic. Chem. 25 (11) (2006) 1103–1111, https://doi.org/10.1016/j.trac.2006.10.005.

[8] I.S. Cebro, R. Bulan, A. Sitorus, Measurement of soil reaction forces by a single flat wheel on the slope soil bin, INMATEH Agricult. Eng. 67 (2) (2022) 56–67, https://doi.org/10.35633/inmateh-67-56.

[9] S.S. Dahia, C. Szabo, Detecting emergent behavior in Complex systems: a machine learning approach, in: Paper presented at the Proceedings of the 38th ACM SIGSIM Conference on Principles of Advanced Discrete Simulation, 2024, https://doi.org/10.1145/3615979.3656064.

[10] S. Devianti Hafsah, R. Yusmanizar Bulan, E. Saputra, Developing of calibration model for acetic acid, flavonoid, and capsaicin content from fresh red chilies using combination vis-NIR spectral descriptors, machine learning and their stacking ensemble learning, Case Stud. Chemic. Environ. Eng. 10 (2024) 100952, https://doi.org/10.1016/j.cscee.2024.100952.

[11] A.S. Devianti Ismy, H.H. Siahaan, A. Sitorus, A novel strategy of NIR spectra multivariate calibration in the presence both of small dataset and non-linearity: a comparative study, Case Stud. Chemic. Environ. Eng. 8 (2023) 100384, https://doi.org/10.1016/j.cscee.2023.100384.

[12] M.A. Ganaie, M. Hu, A.K. Malik, M. Tanveer, P.N. Suganthan, Ensemble deep learning: a review, Eng. Appl. Artif. Intell. 115 (2022) 105151, https://doi.org/10.1016/j.engappai.2022.105151.

[13] A. Hendriadi, V. Salokhe, Improvement of a power tiller cage wheel for use in swampy peat soils, J. Terramech. 39 (2) (2002) 55–70, https://doi.org/10.1016/s0022-4898(02)00005-8.

[14] W. Hermawan, M. Yamazaki, A. Oida, Theoretical analysis of soil reaction on a lug of the movable lug cage wheel, J. Terramech. 37 (2) (2000) 65–86, https://doi.org/10.1016/s0022-4898(99)00014-2.

[15] A. Keen, N. Hall, P. Soni, M.D. Gholkar, S. Cooper, J. Ferdous, A review of the tractive performance of wheeled tractors and soil management in lowland intensive rice production, J. Terramech. 50 (1) (2013) 45–62, https://doi.org/10.1016/j.jterra.2012.08.001.

[16] Y. Khaledian, B.A. Miller, Selecting appropriate machine learning methods for digital soil mapping, Appl. Math Model 81 (2020) 401–418, https://doi.org/10.1016/j.apm.2019.12.016.

[17] W. Kim, J. Hong, Stacked ensemble model for the automatic valuation of residential properties in South Korea: a case study on Jeju Island, Land 13 (9) (2024) 1436, https://doi.org/10.3390/land13091436.

[18] X. Li, H. Wang, S. Qin, L. Lin, X. Wang, W. Cornelis, Evaluating ensemble learning in developing pedotransfer functions to predict soil hydraulic properties, J. Hydrol. 640 (2024) 131658, https://doi.org/10.1016/j.jhydrol.2024.131658.

[19] K. Liu, M. Benetti, M. Sozzi, F. Gasparini, L. Sartori, Soil compaction under different traction resistance conditions—a case study in North Italy, Agriculture 12 (11) (2022) 1954, https://doi.org/10.3390/agriculture12111954.

[20] H. Md-Tahir, J. Zhang, Y. Zhou, M. Sultan, F. Ahmad, J. Du, A. Ullah, Z. Hussain, J. Xia, Engineering design, kinematic and dynamic analysis of high lugs rigid driving wheel, a traction device for conventional agricultural wheeled tractors, Agriculture 13 (2) (2023) 493, https://doi.org/10.3390/agriculture13020493.

[21] A. Mucherino, P.J. Papajorgji, P.M. Pardalos, A. Mucherino, P.J. Papajorgji, P. M. Pardalos, K-nearest neighbor classification, Data Min. Agric. (2009) 83–106, https://doi.org/10.1007/springerreference_65178.

[22] N. Peppes, E. Daskalakis, T. Alexakis, E. Adamopoulou, K. Demestichas, Performance of machine learning-based multi-model voting ensemble methods for network threat detection in agriculture 4.0, Sensors 21 (22) (2021) 7475, https://doi.org/10.3390/s21227475.

[23] L. Pereira, P. Paredes, N. Jovanovic, Soil water balance models for determining crop water and irrigation requirements and irrigation scheduling focusing on the FAO56 method and the dual Kc approach, Agric. Water. Manage 241 (2020) 106357, https://doi.org/10.1016/j.agwat.2020.106357.

[24] M. Rashid, B.S. Bari, Y. Yusup, M.A. Kamaruddin, N. Khan, A comprehensive review of crop yield prediction using machine learning approaches with special emphasis on palm oil yield prediction, IEEe Access. 9 (2021) 63406–63439, https://doi.org/10.1109/access.2021.3075159.

[25] A. Saravanan, S. Parida, M. Murugan, M.S. Reddy, P. Elumalai, S.K. Dash, Thermal performance prediction of a solar air heater with a C-shape finned absorber plate using RF, LR and KNN models of machine learning, Thermal Sci. Eng. Progr. 38 (2023) 101630, https://doi.org/10.1016/j.tsep.2022.101630.

[26] M. Shahhosseini, G. Hu, S.V. Archontoulis, Forecasting corn yield with machine learning ensembles, Front. Plant Sci. 11 (2020) 1120, https://doi.org/10.3389/fpls.2020.01120.

[27] A. Sharma, A. Jain, P. Gupta, V. Chowdary, Machine learning applications for precision agriculture: a comprehensive review, IEEe Access. 9 (2020) 4843–4873, https://doi.org/10.1109/access.2020.3048415.

[28] T. Sudhamathi, K. Perumal, Ensemble regression based Extra Tree Regressor for hybrid crop yield prediction system, Measurement 35 (2024) 101277, https://doi.org/10.1016/j.measen.2024.101277.

[29] Y. Tang, X. Xu, L. Zhang, G. Chen, K. Luo, L. Yan, Structure design and configuration optimization of the reconfigurable deformed tracked wheel based on terramechanics characteristics, J. Intell. Robot. Syst. 108 (1) (2023) 7, https://doi.org/10.1007/s10846-023-01874-7.

[30] C. Trentin, Y. Ampatzidis, C. Lacerda, L. Shiratsuchi, Tree crop yield estimation and prediction using remote sensing and machine learning: a systematic review, Smart Agricult. Techn. (2024) 100556, https://doi.org/10.1016/j.atech.2024.100556.

[31] M. Valentini, G.B. dos Santos, B. Muller Vieira, Multiple linear regression analysis (MLR) applied for modeling a new WQI equation for monitoring the water quality of Mirim Lagoon, in the state of Rio Grande do Sul—Brazil, SN. Appl. Sci. 3 (2021) 1–11, https://doi.org/10.1007/s42452-020-04005-1.
[32] S. Veerasakulwat, A. Sitorus, V. Udompetaikul, Rapid classification of sugarcane nodes and internodes using near-infrared spectroscopy and machine learning techniques, Sensors 24 (22) (2024) 7102, https://doi.org/10.3390/s24227102.
[33] S. Viswanathan, N.V. Sridharan, J. Rakkiyannan, S. Vaithiyanathan, Brake fault diagnosis using a voting ensemble of machine learning classifiers, Results. Eng. 23 (2024) 102857, https://doi.org/10.1016/j.rineng.2024.102857.
[34] C. Watyotha, D. Gee-Clough, V.M. Salokhe, Effect of circumferential angle, lug spacing and slip on lug wheel forces, J. Terramech. 38 (1) (2001) 1–14, https://doi.org/10.1016/S0022-4898(00)00008-2.
[35] C. Watyotha, V.M. Salokhe, PM—Power and machinery: tractive performance of cage wheels with opposing circumferential lugs, J. Agric. Eng. Res. 79 (4) (2001) 389–398, https://doi.org/10.1006/jaer.2001.0708.
[36] C. Watyotha, V.M. Salokhe, Pull, lift and side force characteristics of cage wheels with opposing circumferential lugs, Soil Tillage Res. 60 (3) (2001) 123–134, https://doi.org/10.1016/S0167-1987(01)00175-1.
[37] H. Zhang, L. Zhang, Y. Liu, L. Zhang, Understanding travel mode choice behavior: influencing factors analysis and prediction with machine learning method, Sustainability. 15 (14) (2023) 11414, https://doi.org/10.3390/su151411414.
[38] M. Zounemat-Kermani, O. Batelaan, M. Fadaee, R. Hinkelmann, Ensemble machine learning paradigms in hydrology: a review, J. Hydrol. 598 (2021) 126266, https://doi.org/10.1016/j.jhydrol.2021.126266.